PixelFLEX™

EFSeries

ADVANTAGE

ECONOMIC SIMPLICITY

High quality LED display designed with extreme simplicity in mind to allow for a lower building cost, making the EF Series the most economically friendly display on our roster.

MULTIPLE RESOLUTIONS

The EF Series comes in a variety of resolutions, with pitches that include 3.9, 5.2 and 6.25mm.

FRONT SERVICEABLE

Each EF Series LED tile is both fully front and rear serviceable allowing for easy on site maintenance over the lifespan of your video wall.

ECONOMICAL LED DISPLAY

The introduction of the new EF Series from PixelFLEX presents a fully front serviceable, economical solution for indoor LED installations while ensuring the high-quality standards you expect from PixelFLEX. Sizing of the cabinets reduces processing and hardware in each cabinet, ultimately keeping manufacturing costs down. In addition to the tiles simplistic design, it is fully front serviceable making it ideal for wall mount solutions in churches, corporate facilities and much more. The EF Series also offers custom curving capabilities as an upgrade to the standard model.

DESIGN

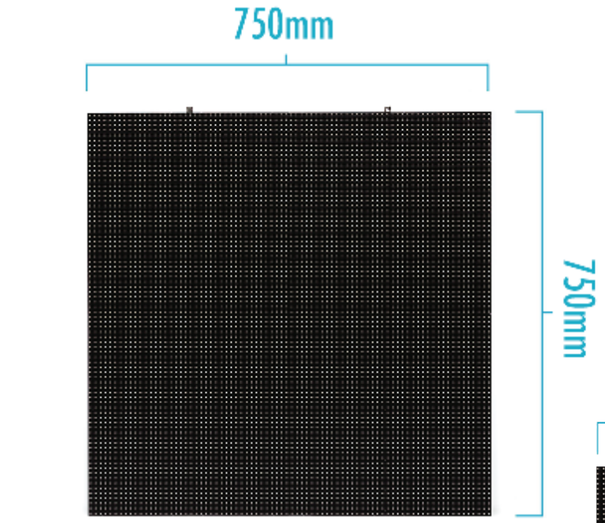

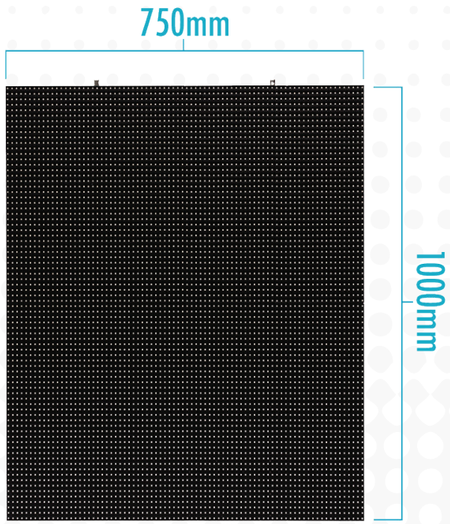

VARIABLE CONFIGURATIONS

The EF Series cabinet is available in multiple sizing configurations allowing build specifications to be met much easier.

Standard options include:
750mm x 750mm
750mm x 1000mm
1000mm x 750mm
1000mm x 1000mm

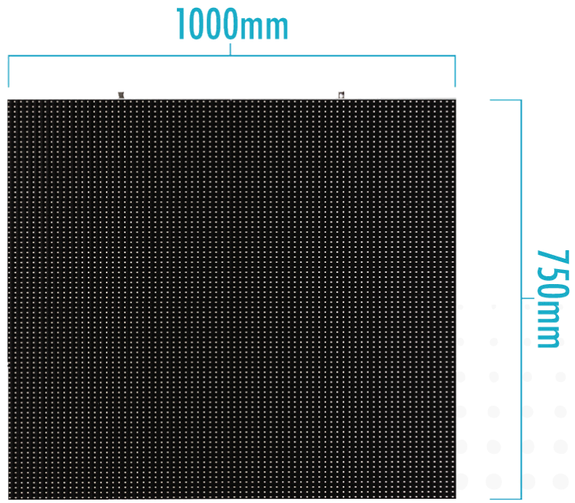

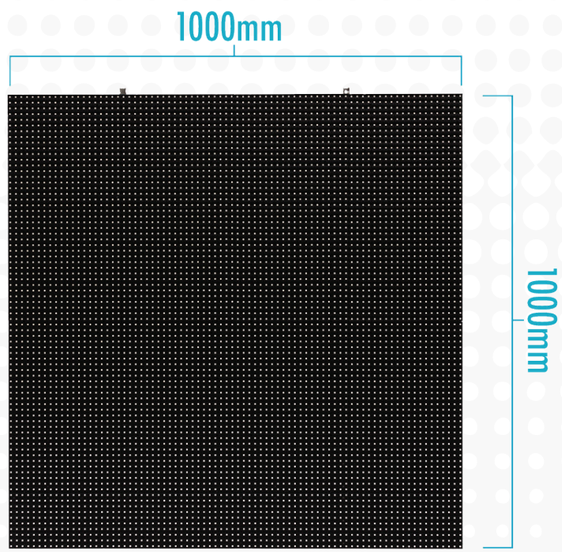

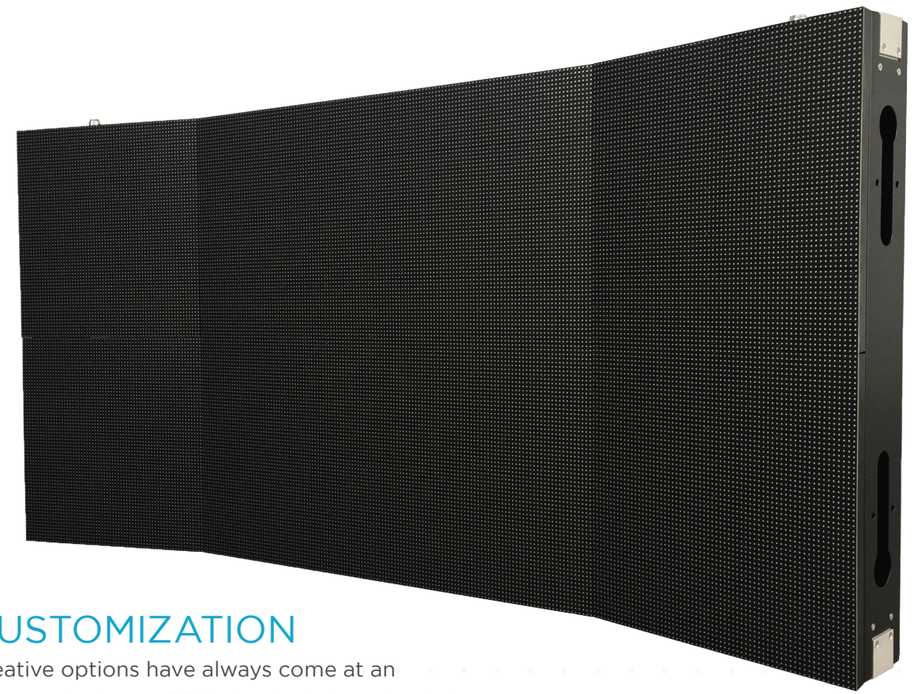

CUSTOMIZATION

Creative options have always come at an astronomical cost. EF Series is designed to help achieve creative display configurations with without breaking a project budget.

CURVABILITY

Cabinets can be built to custom curves +/- 15 degrees convex or concave

RIGHT-ANGLE POTENTIAL

Each Tile can be manufactured to a meet specifications for right angle corner builds for unique applications.

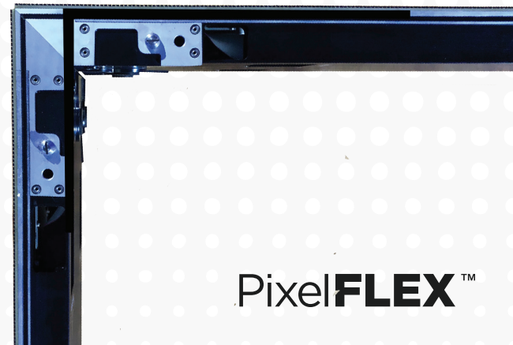

PixelFLEX™

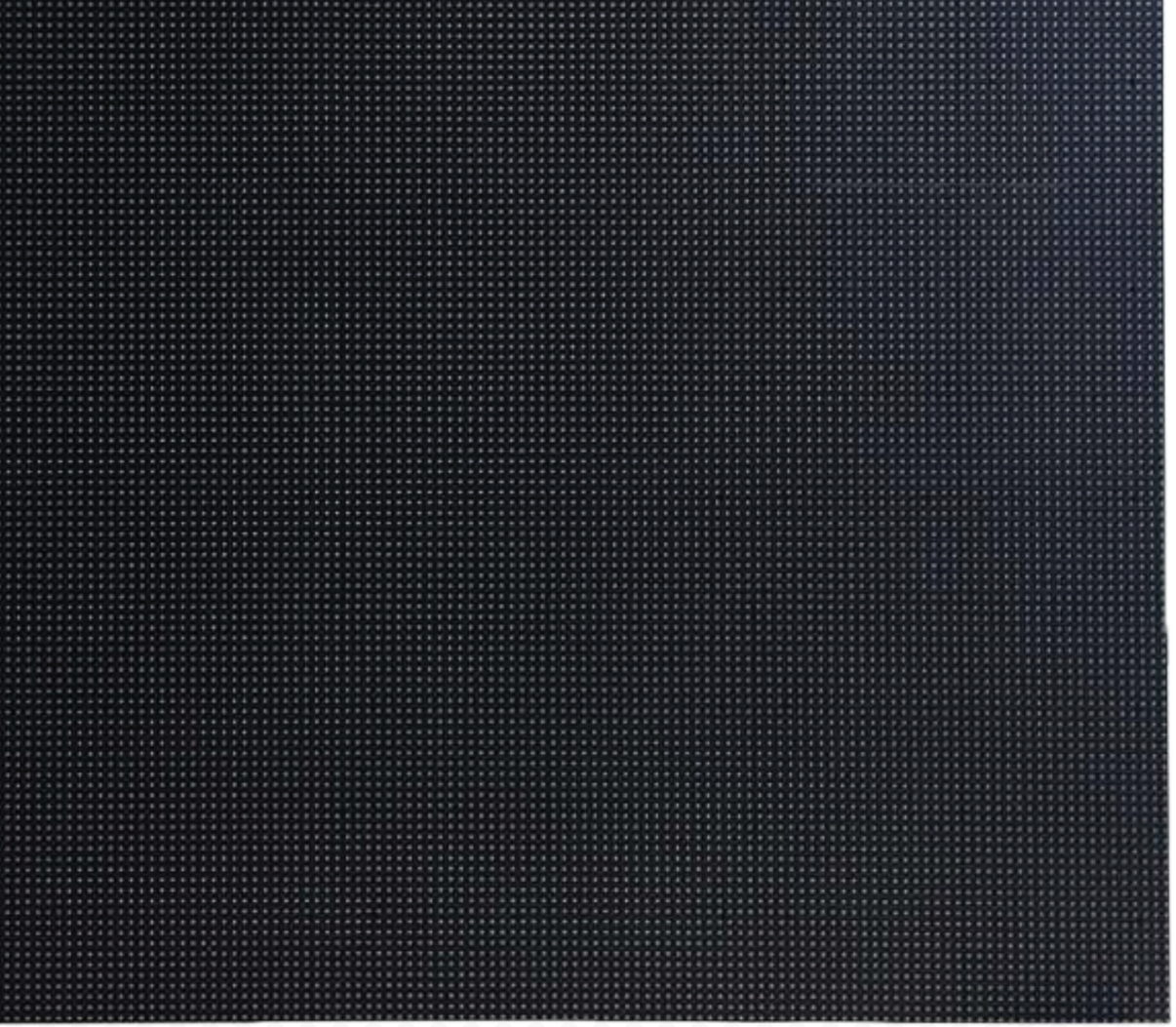

DESIGNED FOR WALL MOUNTING

The EF Series LED Tile is specifically designed for easy wall mounting solutions where its lightweight and simplistic design attaches to standard Uni-Strut system.

HIGH BRIGHTNESS CAPABILITIES

All EF series tiles come standard with a 1000 Nit brightness rating with an option 3500 Nit upgrade making it ideal for both low light and high ambient light applications.

APPLICATION

TECHNICAL SPECIFICATIONS

3.9mm
Pitch

1000mm
Width

65,536/m²
Density

1000mm
Height

1000-3500Nit
Brightness

80mm
Depth

IP40
Weather Rating

CE/ETL/FCC
Certifications

EF Series Specifications												
Cabinet Parameter	750 x 750 Cabinet			750 x 1000 Cabinet			1000 x 750 Cabinet			1000 x 1000 Cabinet		
Model	EFi-3.97x7	EFi-5.27x7	EFi-6.257x7	EFi-3.97x1	EFi-5.27x1	EFi-6.257x1	EFi-3.91x7	EFi-5.21x7	EFi-6.251x7	EFi-3.91x1	EFi-5.21x1	EFi-6.251x1
Pixel Pitch	3.9mm	5.2mm	6.25mm	3.9mm	5.2mm	6.25mm	3.9mm	5.2mm	6.25mm	3.9mm	5.2mm	6.25mm
Pixel Density (PSM)	65,536	36,864	25,600	65,536	36,864	25,600	65,536	36,864	25,600	65,536	36,864	25,600
Panel Size	750x750x80 mm/29.5x29.5x3.14in			750x1000x80 mm/29.5x39.3x3.14in			1000x750x80 mm/39.3x29.5x3.14in			1000x1000x80 mm/39.3x39.3x3.14in		
Panel Resolution	256 x 256	192 x 192	160 x 160	256 x 256	192 x 192	160 x 160	256 x 256	192 x 192	160 x 160	256 x 256	192 x 192	160 x 160
Panel Weight	30kg/66.1 lb											
Serviceability	Fully Front and Rear											
Curving Capability	+/- 10° Convex or Concave - Please Consult a sales representative for curing capabilities.											
Brightness	1000-1200 Nits											
Refresh Rate	19200Hz											
Viewing Angle (H/V)	140° / 140°											
Operating Temperature	-14°F ~ 104°F / -10°C ~ 40°C											
Power Connection	Neutrik											
Working Power (Avg:Max)	250 / 625 W/m											
Input Power	110/240v | 50-60Hz											
Processing	NovaStar											
Data Connection	Cat 5/6											
Lifetime Hours	100,000 Hours											
Weather Rating	IP40											
Certifications	CE / FCC / ETL / RoHS											

*All specifications are property of PixelFLEX LLC., and are subject to change without notice. Please verify specifications and information before final sale. High brightness options available.